NAOTECH

ADVANCED OPTICAL LENS for CCTV and AUTOMOTIVE CAMERA

NEW ITEMS

1. 車載用メガピクセルレンズ

▶ New : ① 2Mega 1/2.7″ D=147°
② 2Mega 1/4″ D=141°
③ 1.3Mega 1/4″ D=151°

2. 防犯カメラ用メガピクセルレンズ

▶ New : ① 3Mega 1/2.7″ D=82°
② 3Mega 1/2.9″ D=106°

Update : 2014. 07. NAOTECH CO.,LTD/ BUSINESS DEPT.

Website: www.naotech.co.kr / E-mail: jhkim@naotech.co.kr / Tel: 070-8656-4059

製品名称説明

NL○○○△SF

N	Naotech [ナオテック]
L	Lens [レンズ]
○.○○mm	Effective Focal Length [焦点距離]
△	Lens Composition [レンズ構成]
S	Standard [標準型モデル]
F	IR Filter [IR フィルター有無]

製品リスト

1. 車載用広角レンズ

Page	Model	Focal Length (mm)	B.F.L (mm)	F.#	Construction			Mount Dimension			T.T.L (mm)	Sensor Size	View Angle (deg.)		
					P	G	F	M	X	P			D	H	V
5	NL3205NF**(2M)**	3.2	5.93	2.2		5	1	12	X	0.5	17.7	**1/2.7"**	147.3	118.6	60.4
6	NL2616SF**(2M)**	2.6	5.63	2.2		6	1	12	X	0.5	24.09	**1/2.7"**	156.4	132.9	72
7	NL196QF**(2M)**	1.99	3.23	2.5		6	1	8	X	0.35	13.17	1/4"	141.1	109.8	80.9
8	NL205QF1**(1.3M)**	2.14	3.45	2.0		5	1	12	X	0.5	16.69	1/4"	151.7	107.8	76.5
9	NL2435NF**(1.3M)**	2.26	3.59	2.0		5	1	12	X	0.5	17.18	1/4"	122.2	92.8	67.4
10	NL146NF	1.46	2.32	2.5		6	1	12	X	0.5	15.21	1/4"	**190**	145	104.3
11	NL245M835F	2.43	2.98	**1.9**	2	3	1	8	X	0.35	11.61	1/4"	121.7	91.1	66.2
12	NL1566QMV835F	1.56	2.21	2.5		6	1	8	X	0.35	11.98	1/4"	176.4	139.6	103.8
13	NL1876MV835F	1.87	2.44	2.5		6	1	8	X	0.35	12.31	1/4"	146.4	115.8	86.3
14	NL2795M835F	2.79	2.62	2.5		5	1	8	X	0.35	12.41	1/4"	106	78.8	56.7
15	NL1796DTF	1.79	3.28	2.5		6	1	12	X	0.5	19.1	1/4"	170	127.6	93.3
16	NL254SF	2.0	5.28	2.0		4	1	12	X	0.5	20.97	1/4"	120	89.8	64.7
17	NL2456SF	2.45	5.13	2.0		6	1	12	X	0.5	22.96	1/3"	160	120	86.6
18	NL266MCF	2.6	5.07	2.0		6	1	12	X	0.5	21.28	1/3"	150	112.4	81.9

製品リスト

2. 防犯カメラ用レンズ

Page	Model	Focal Length (mm)	B.F.L (mm)	F.#	Construction			Mount Dimension			T.T.L (mm)	Sensor Size	View Angle (deg.)		
					P	G	F	M	X	P			D	H	V
19	NL435SF**(3M)**	4.3	7.48	2.2		5	1	12	X	0.5	19.8	**1/2.7"**	92.6	80	43.8
20	NL3665NF**(3M)**	3.66	6.83	2.2		5	1	12	X	0.5	19.62	**1/2.9"**	106.4	90	48.2
21	NL295SF	2.9	5.74	2.0		5	1	12	X	0.5	21.8	1/3"	143.1	102.2	72.8
22	NL304MCF	3.0	5.85	2.0		4	1	12	X	0.5	20.92	1/3"	126.1	96.1	69.6
23	NL36415NF	3.6	6.16	**1.5**		4	1	12	X	0.5	20.34	1/3"	108.5	81.5	59
24	NL274LDF **(Low distortion)**	2.7	3.2	2.8	1	3	1	12	X	0.5	17.08	1/4"	85	71.1	55.4
25	NL325SF	3.2	4.95	2.0		5	1	12	X	0.5	17.16	1/4"	92.7	70.3	51
26	NL364CN	3.6	5.12	1.8		4		12	X	0.5	20.89	1/3"	101.2	78.7	57.9
27	NL434N	4.3	6.19	2.0		4		12	X	0.5	21.63	1/3"	85	66	49.3
28	NL604Q	6.0	8.62	2.0		4		12	X	0.5	21.98	1/3"	58.3	46.4	34.6
29	NL804N	8.0	5.1	2.0		4		12	X	0.5	12.61	1/3"	41	33.8	25.5
30	NL1203N	12.0	8.73	2.0		3		12	X	0.5	18.71	1/3"	28	22.7	17.1

Mega Pixel レンズ

NL3205NF (2M Pixel)

	Focal Length (mm)	Back Focal Length (mm)	F.#	Construction			Mount Dimension			Length from sensor to lens top (mm)	Sensor Size	View Angle (deg.)
				P	G	F	M	X	P			D
	3.2	5.93	2.2		5	1	12	X	0.5	17.7	**1/2.7"**	147.3°

◎ Spec Sheet

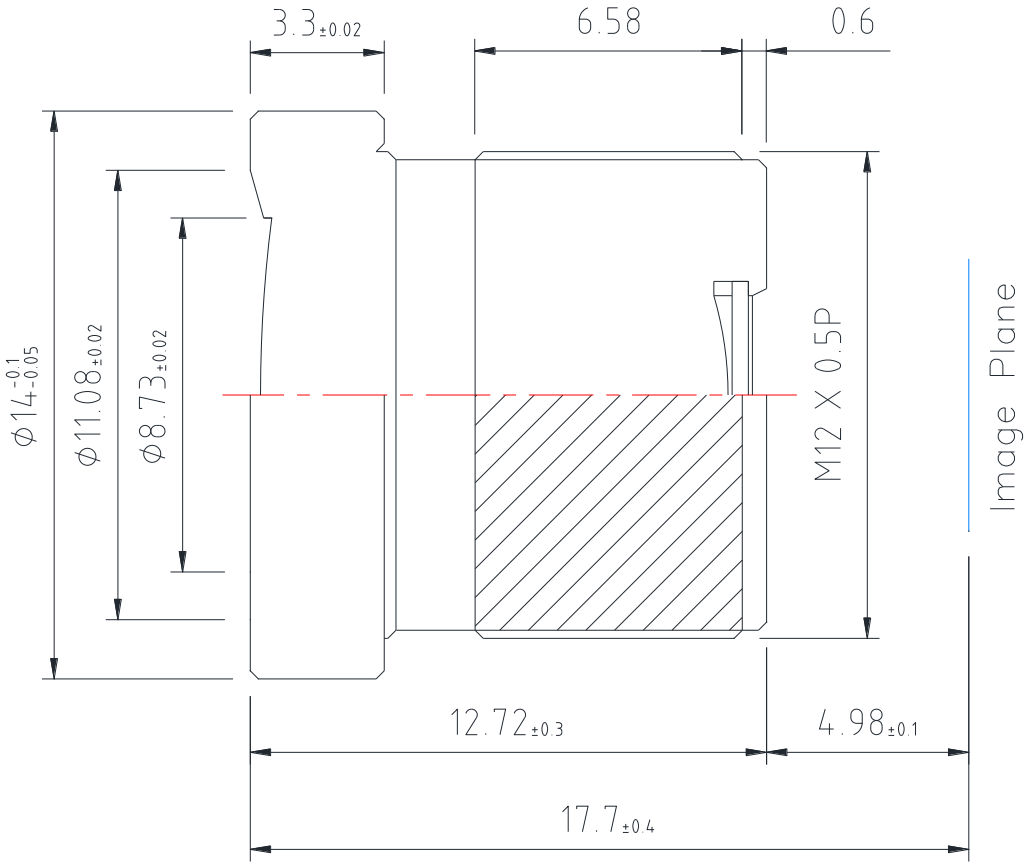

Mega Pixel レンズ

NL2616SF (2M Pixel)

	Focal Length (mm)	Back Focal Length (mm)	F.#	Construction			Mount Dimension			Length from sensor to lens top (mm)	Sensor Size	View Angle (deg.)
				P	G	F	M	X	P			D
	2.6	5.63	2.2		6	1	12	X	0.5	24.09	1/2.7"	156.4°

◎ Spec Sheet

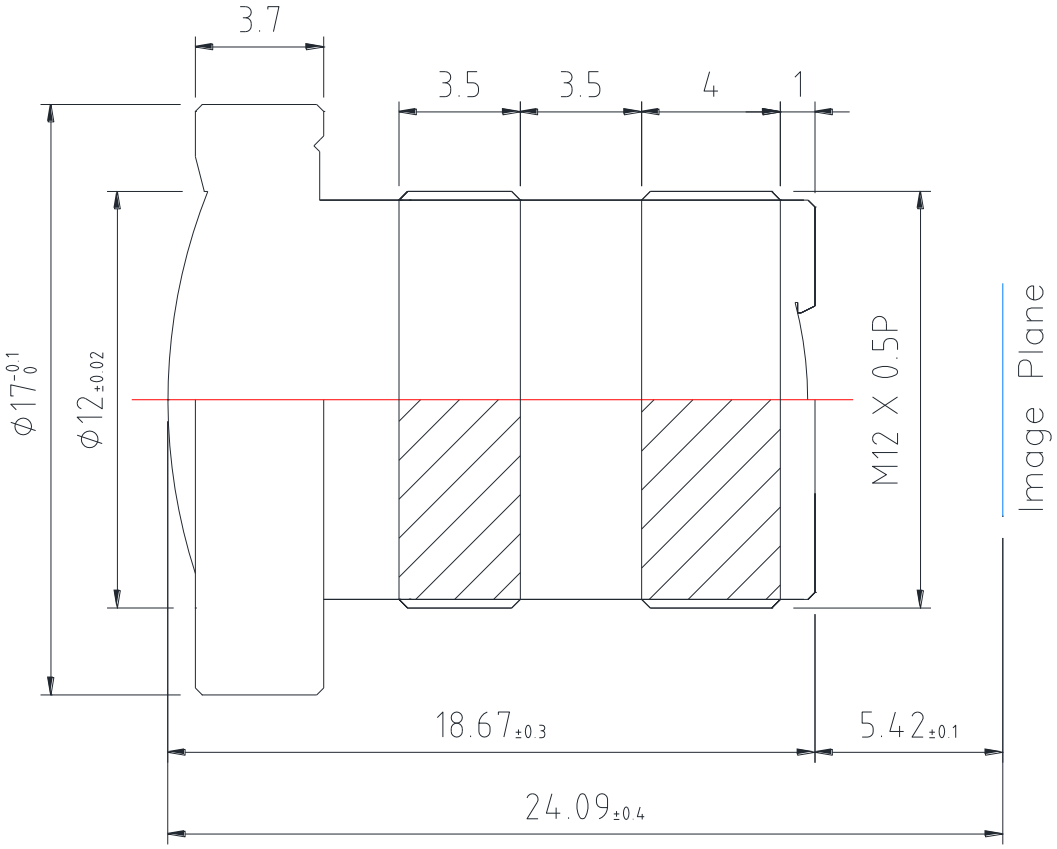

Mega Pixel レンズ

NL196QF (2M Pixel)

	Focal Length (mm)	Back Focal Length (mm)	F.#	Construction			Mount Dimension			Length from sensor to lens top (mm)	Sensor Size	View Angle (deg.)
				P	G	F	M	X	P			D
	1.99	3.23	2.5		6	1	8	X	0.35	13.17	1/4"	141.1°

◎ Spec Sheet

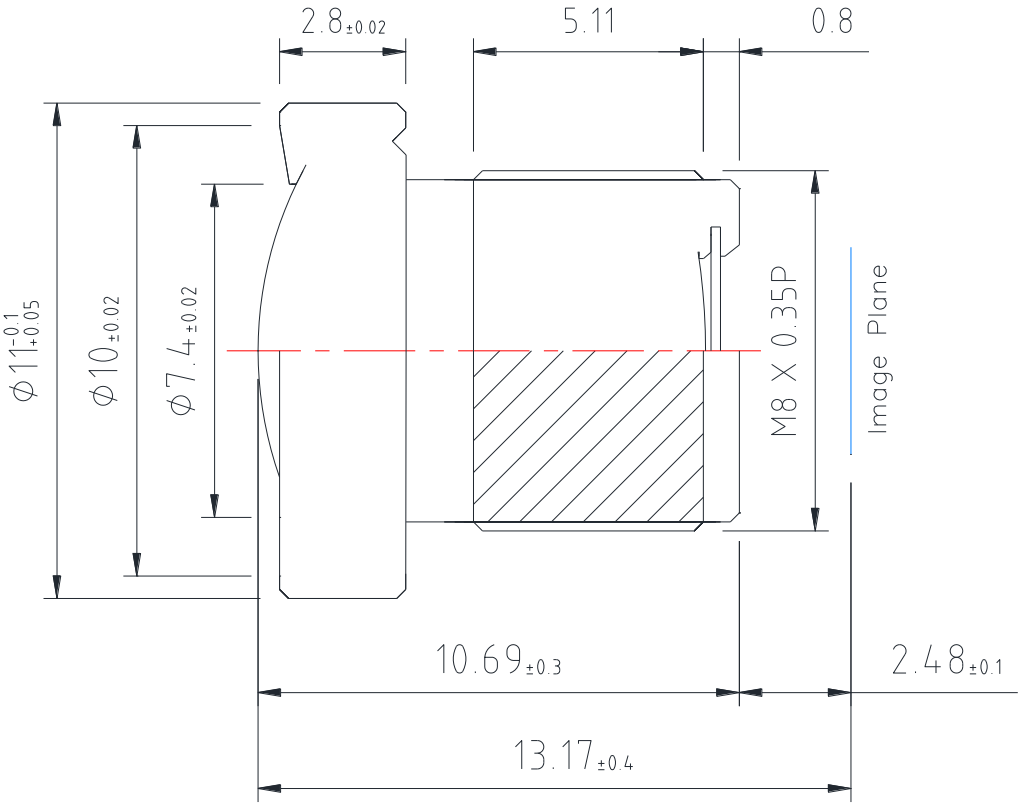

Mega Pixel レンズ

NL205QF1 (1.3M Pixel)

	Focal Length (mm)	Back Focal Length (mm)	F.#	Construction			Mount Dimension			Length from sensor to lens top (mm)	Sensor Size	View Angle (deg.)
				P	G	F	M	X	P			D
	2.14	3.45	2.0		5	1	12	X	0.5	16.69	1/4″	151.2°

◎ Spec Sheet

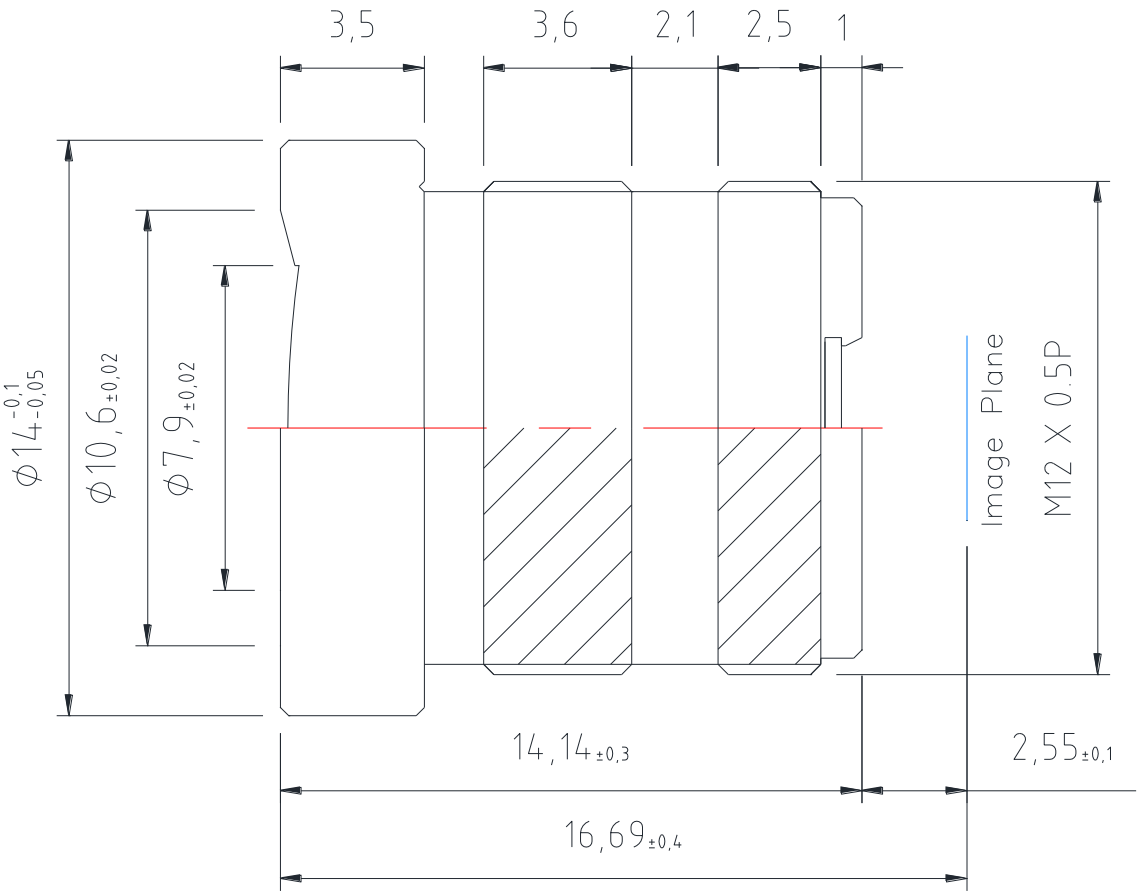

Mega Pixel レンズ

NL2435NF (1.3M Pixel)

	Focal Length (mm)	Back Focal Length (mm)	F.#	Construction			Mount Dimension			Length from sensor to lens top (mm)	Sensor Size	View Angle (deg.)
				P	G	F	M	X	P			D
	2.26	3.59	2.0		5	1	10	X	0.5	17.18	1/4"	122.2°

◎ Spec Sheet

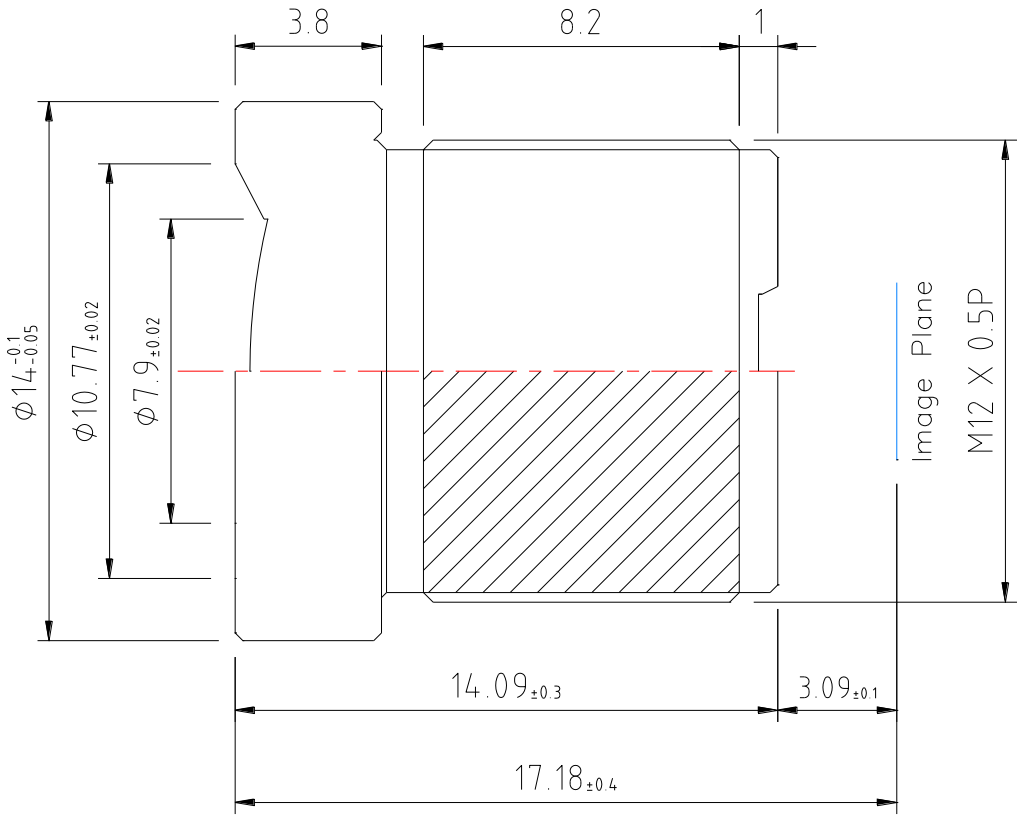

車載用 レンズ

NL146NF

	Focal Length (mm)	Back Focal Length (mm)	F.#	Construction			Mount Dimension			Length from sensor to lens top (mm)	Sensor Size	View Angle (deg.)
				P	G	F	M	X	P			D
	1.46	2.32	2.5		6	1	12	X	0.5	15.21	1/4"	**190°**

◎ Spec Sheet

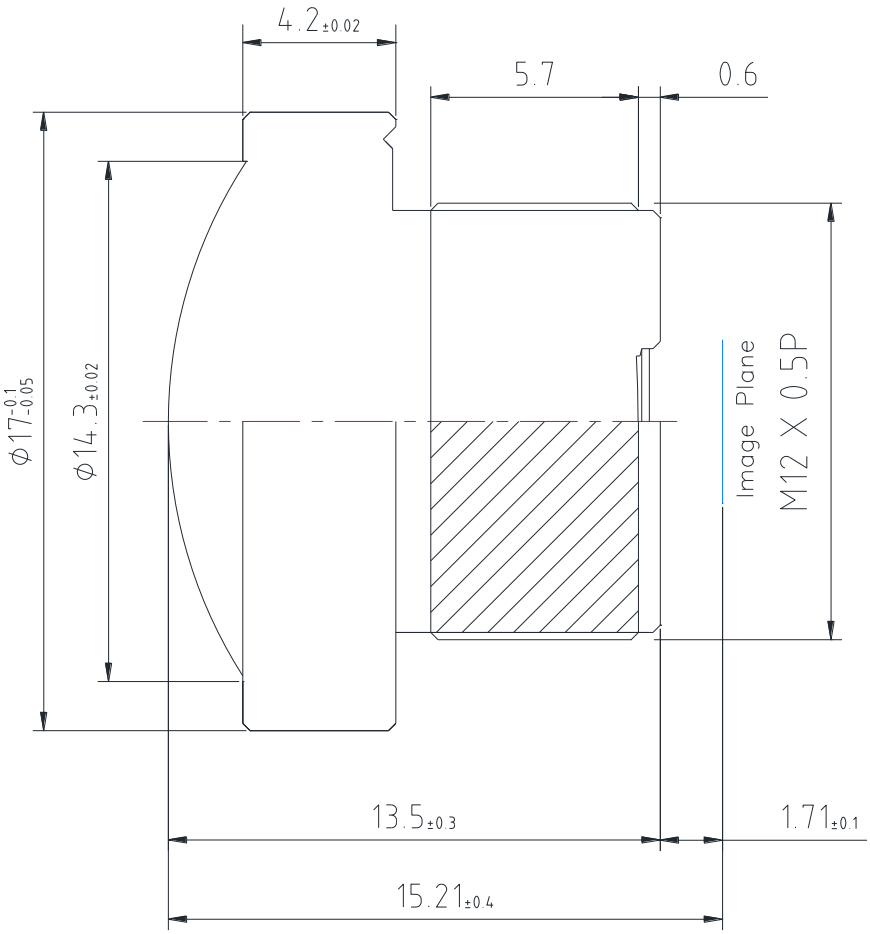

車載用 レンズ

NL245M835F

	Focal Length (mm)	Back Focal Length (mm)	F.#	Construction			Mount Dimension			Length from sensor to lens top (mm)	Sensor Size	View Angle (deg.)
				P	G	F	M	X	P			D
	2.43	2.98	1.9	2	3	1	8	X	0.35	11.61	1/4"	121.7°

◎ Spec Sheet

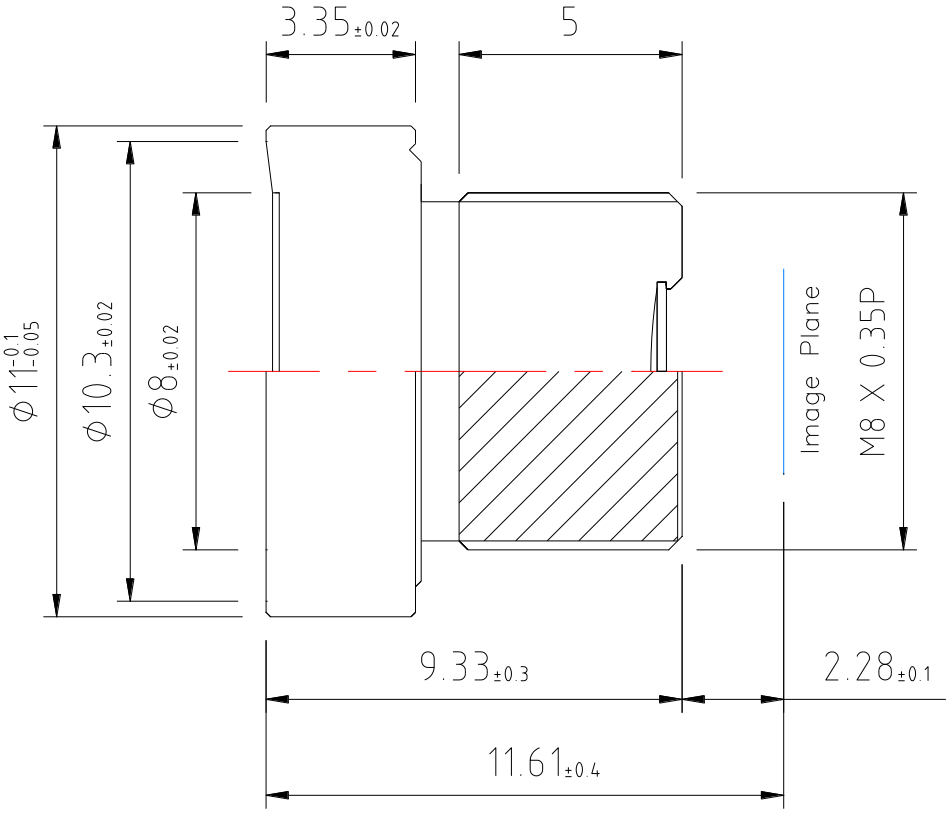

車載用 レンズ

NL1566QMV835F

	Focal Length (mm)	Back Focal Length (mm)	F.#	Construction			Mount Dimension			Length from sensor to lens top (mm)	Sensor Size	View Angle (deg.)
				P	G	F	M	X	P			D
	1.56	2.21	2.5		6	1	8	X	0.35	11.98	1/4 "	176.4°

◎ Spec Sheet

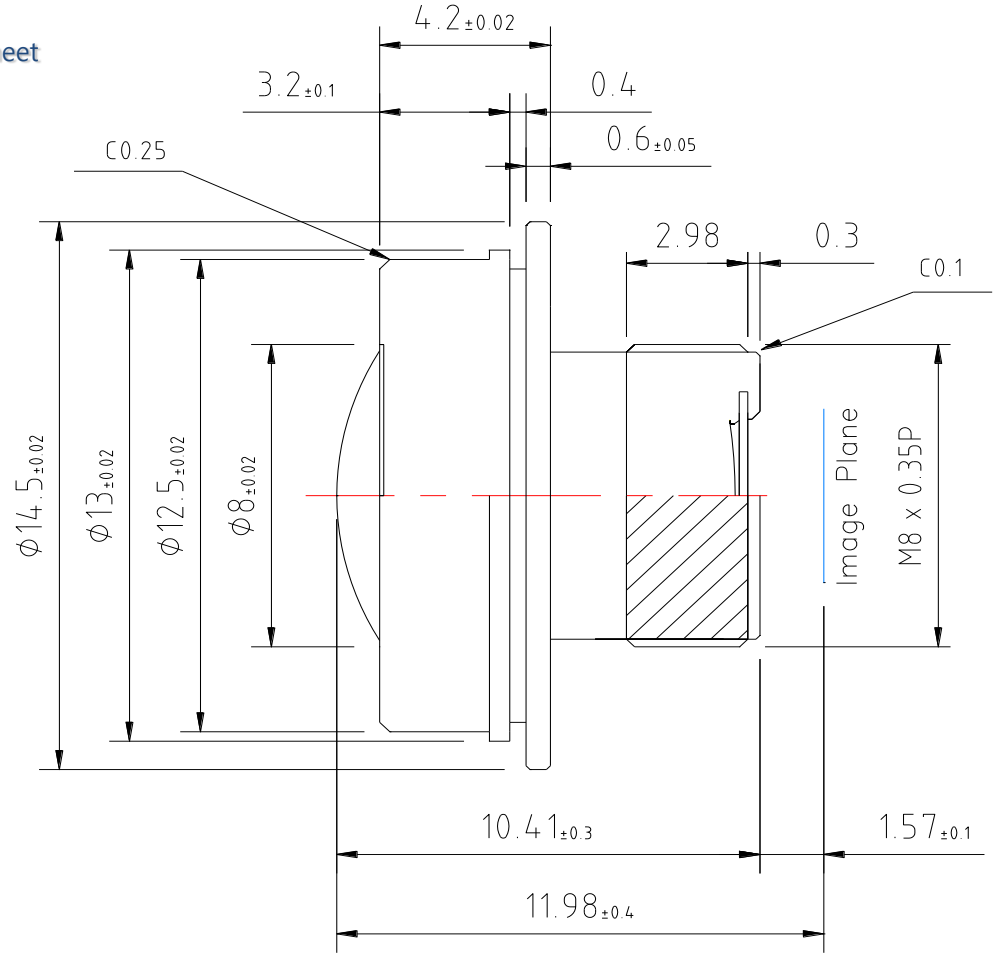

車載用 レンズ

NL1876MV835F

	Focal Length (mm)	Back Focal Length (mm)	F.#	Construction			Mount Dimension			Length from sensor to lens top (mm)	Sensor Size	View Angle (deg.)
				P	G	F	M	X	P			D
	1.87	2.44	2.5		6	1	8	X	0.35	12.31	1/4"	146.4°

◎ Spec Sheet

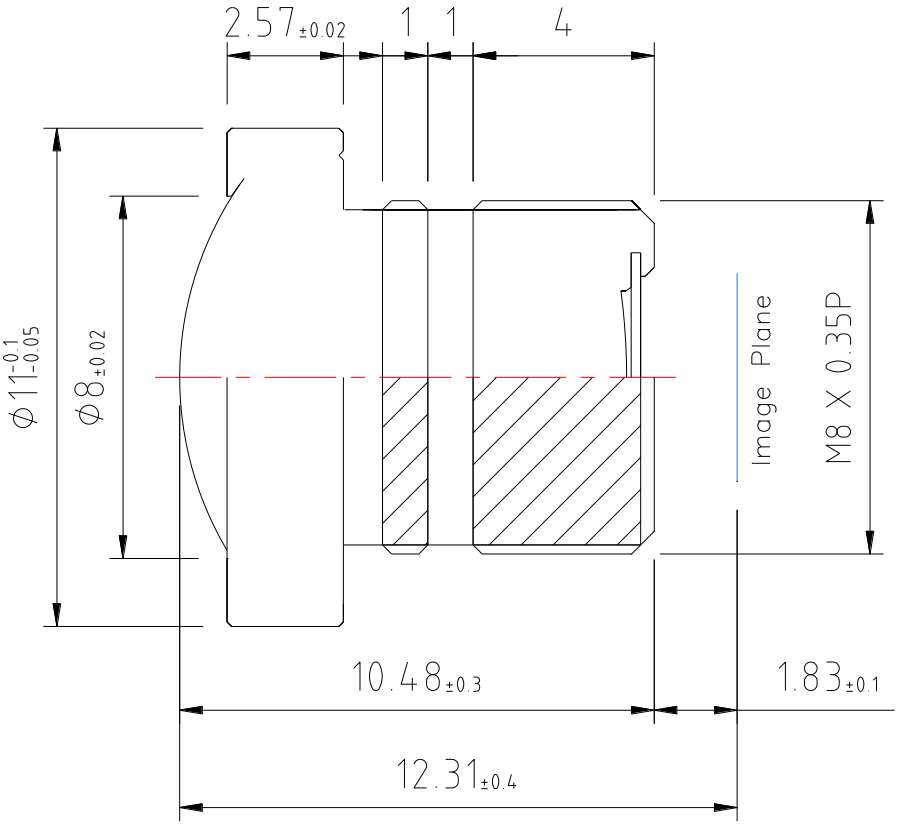

車載用 レンズ

NL2795M835F

	Focal Length (mm)	Back Focal Length (mm)	F.#	Construction			Mount Dimension			Length from sensor to lens top (mm)	Sensor Size	View Angle (deg.)
				P	G	F	M	X	P			D
	2.79	2.62	2.5		5	1	8	X	0.35	12.41	1/4"	106°

◎ Spec Sheet

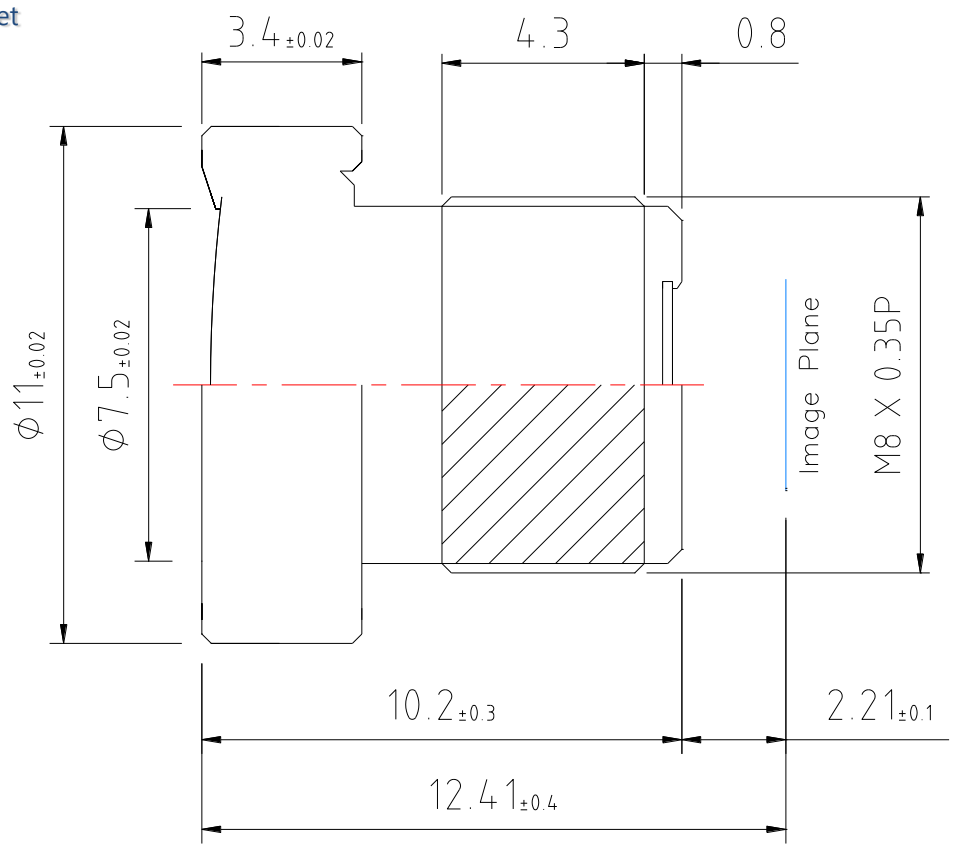

車載用 レンズ

NL1796DTF

	Focal Length (mm)	Back Focal Length (mm)	F.#	Construction			Mount Dimension			Length from sensor to lens top (mm)	Sensor Size	View Angle (deg.)
				P	G	F	M	X	P			D
	1.79	3.28	2.5		6	1	12	X	0.5	19.1	1/4″	170°

◎ Spec Sheet

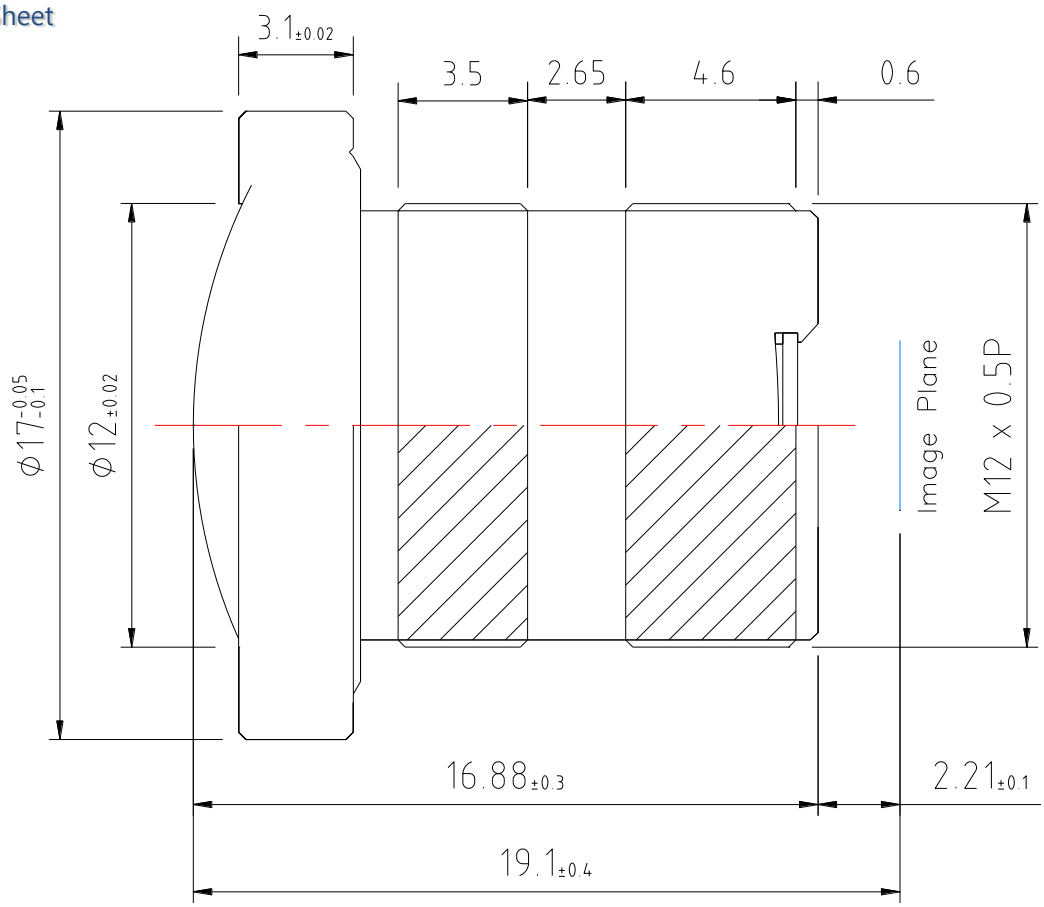

車載用 レンズ

NL254SF

	Focal Length (mm)	Back Focal Length (mm)	F.#	Construction			Mount Dimension			Length from sensor to lens top (mm)	Sensor Size	View Angle (deg.)
				P	G	F	M	X	P			D
	2.5	5.28	2.0		4	1	12	X	0.5	20.97	1/4"	120°

◎ Spec Sheet

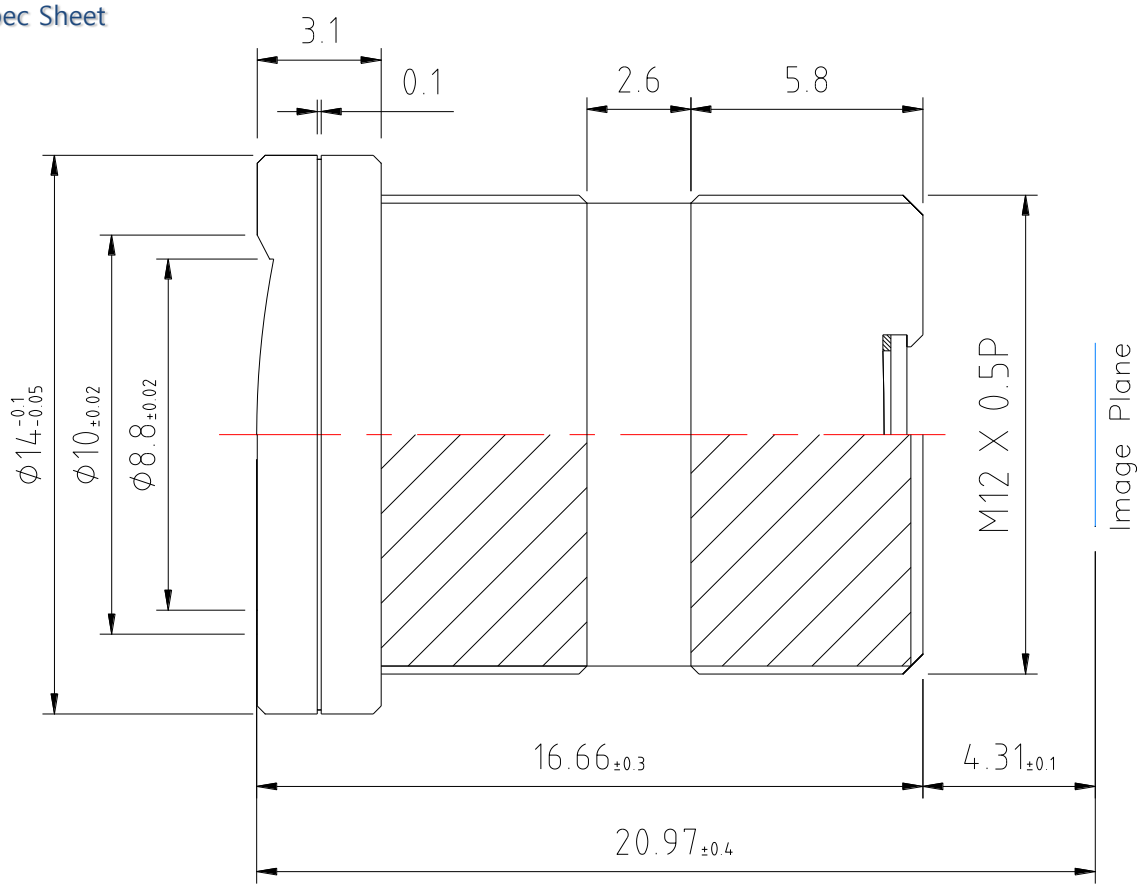

車載用 レンズ

NL2456SF

	Focal Length (mm)	Back Focal Length (mm)	F.#	Construction			Mount Dimension			Length from sensor to lens top (mm)	Sensor Size	View Angle (deg.)
				P	G	F	M	X	P			D
	2.45	5.13	2.0		6	1	12	X	0.5	22.96	1/3″	160°

◎ Spec Sheet

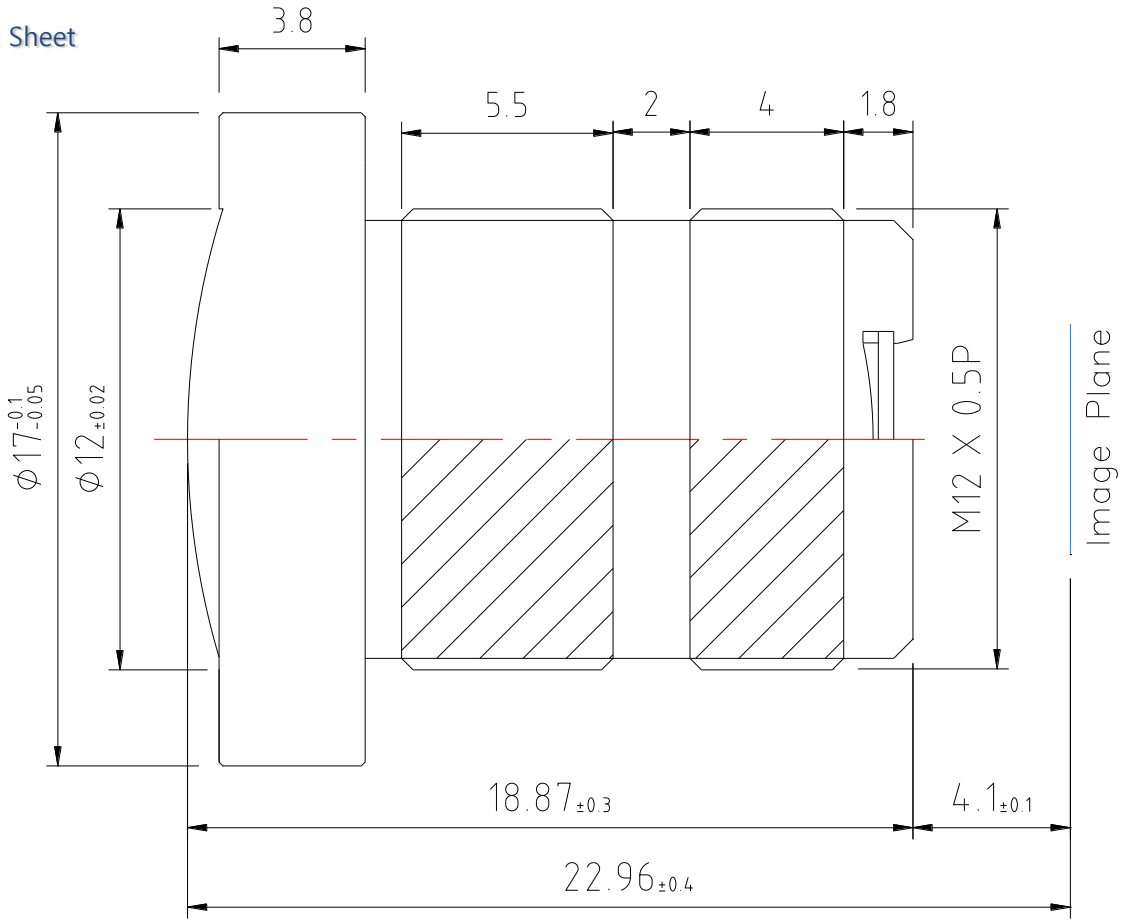

車載用 レンズ

NL266MCF

	Focal Length (mm)	Back Focal Length (mm)	F.#	Construction			Mount Dimension			Length from sensor to lens top (mm)	Sensor Size	View Angle (deg.)
				P	G	F	M	X	P			D
	2.6	5.07	2.0		6	1	12	X	0.5	21.28	1/3″	150°

◎ Spec Sheet

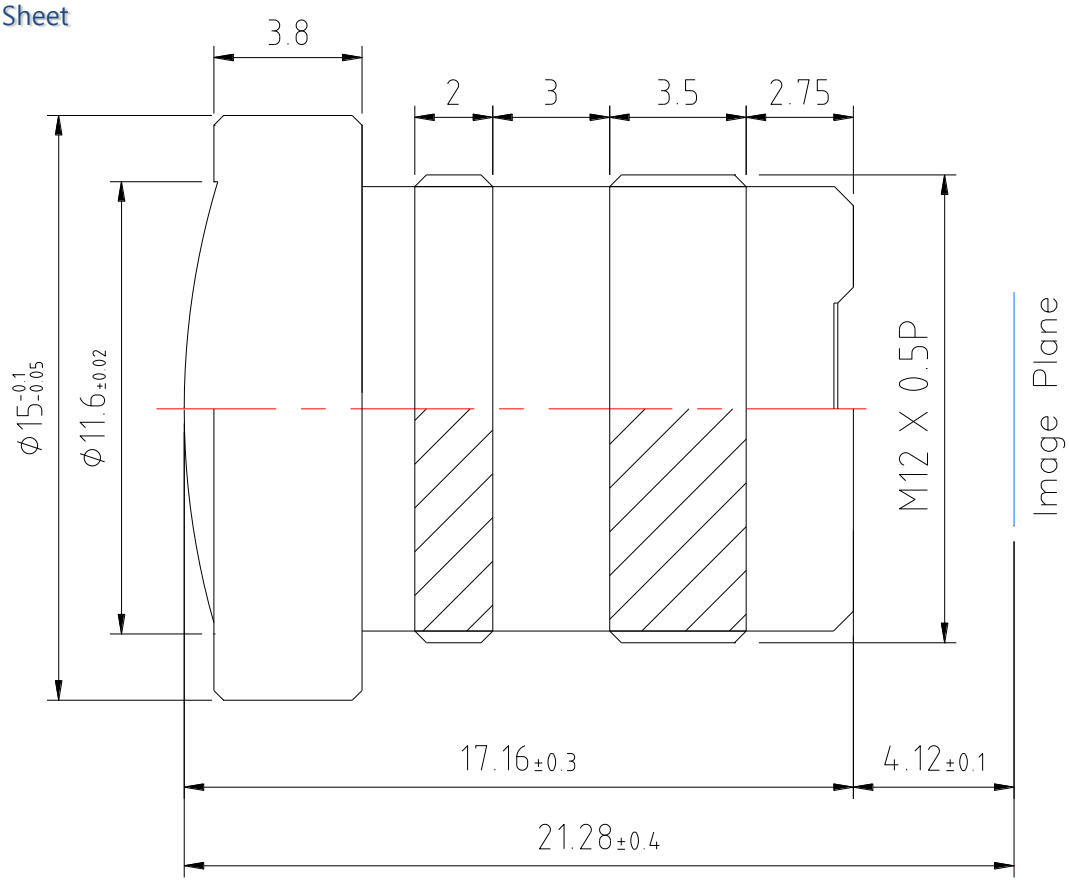

Mega Pixel レンズ

NL435SF (3M Pixel)

	Focal Length (mm)	Back Focal Length (mm)	F.#	Construction			Mount Dimension			Length from sensor to lens top (mm)	Sensor Size	View Angle (deg.)
				P	G	F	M	X	P			D
	4.3	7.48	2.2		5	1	12	X	0.5	19.8	1/2.7"	92.6°

◎ Spec Sheet

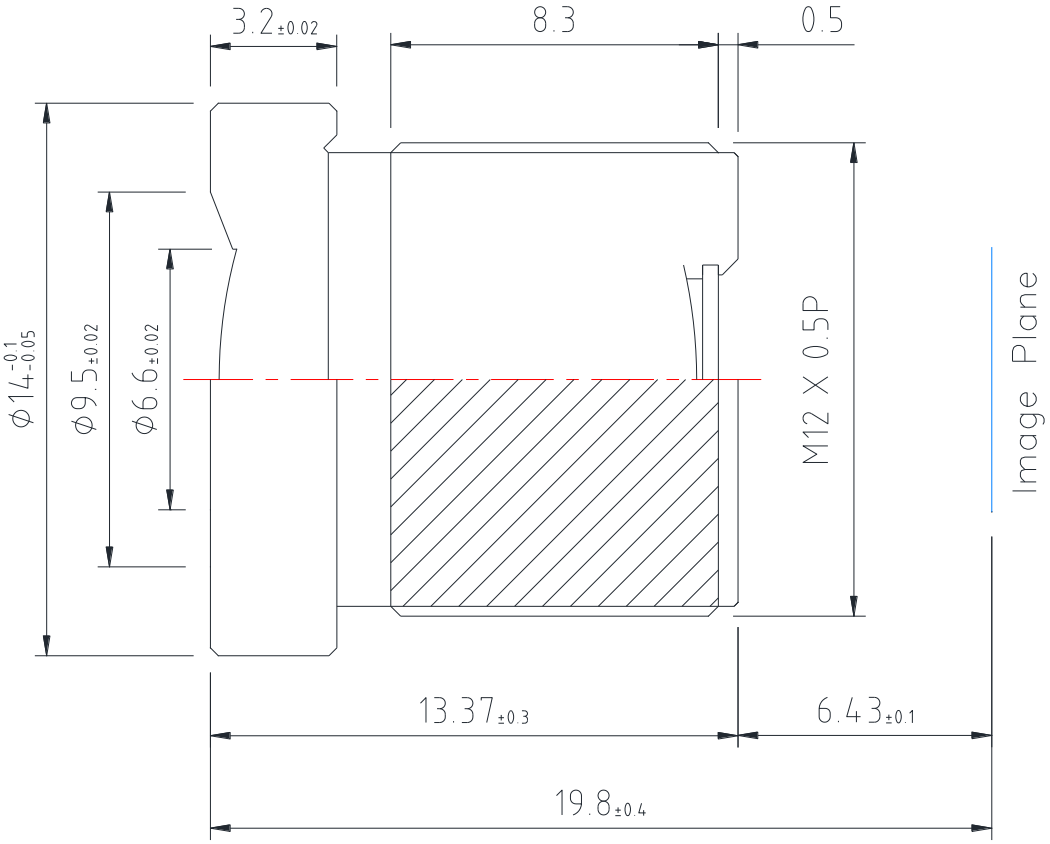

Mega Pixel レンズ

NL3665NF (3M Pixel)

	Focal Length (mm)	Back Focal Length (mm)	F.#	Construction			Mount Dimension			Length from sensor to lens top (mm)	Sensor Size	View Angle (deg.)
				P	G	F	M	X	P			D
	3.66	6.83	2.2		5	1	12	X	0.5	19.62	**1/2.9"**	106.4°

◎ Spec Sheet

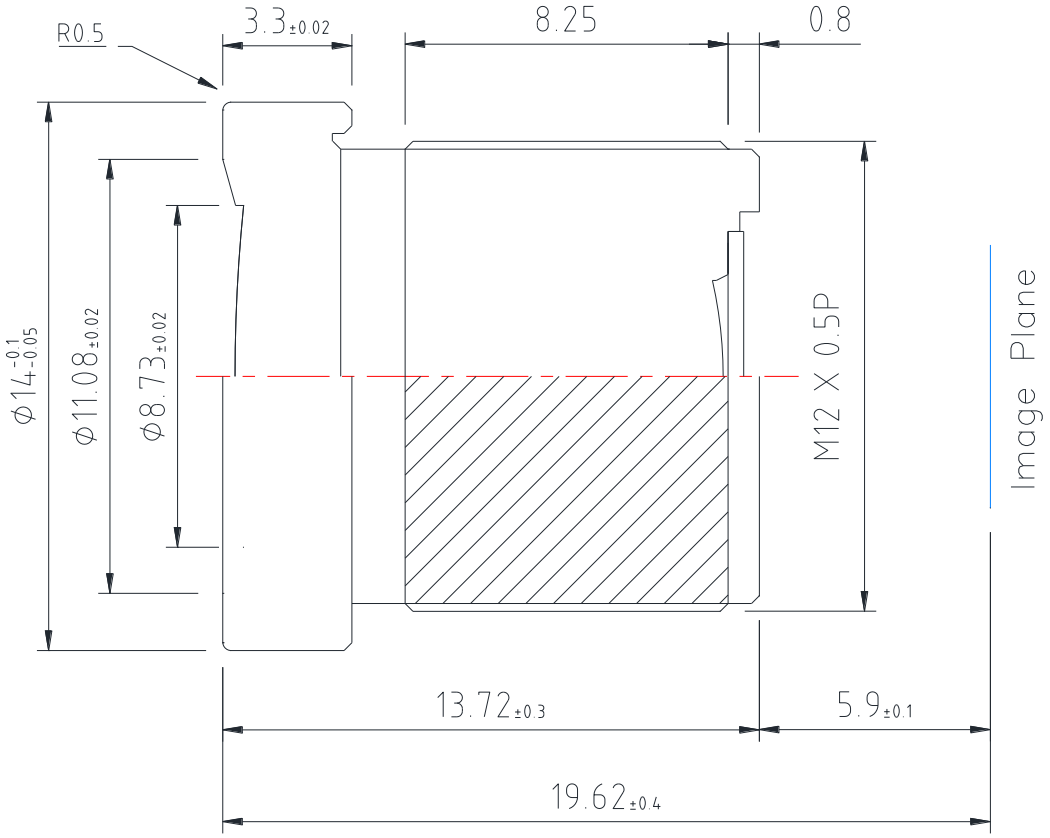

車載用 レンズ

NL295SF

	Focal Length (mm)	Back Focal Length (mm)	F.#	Construction			Mount Dimension			Length from sensor to lens top (mm)	Sensor Size	View Angle (deg.)
				P	G	F	M	X	P			D
	2.9	5.74	2.0		5	1	12	X	0.5	21.8	1/3″	143.1°

◎ Spec Sheet

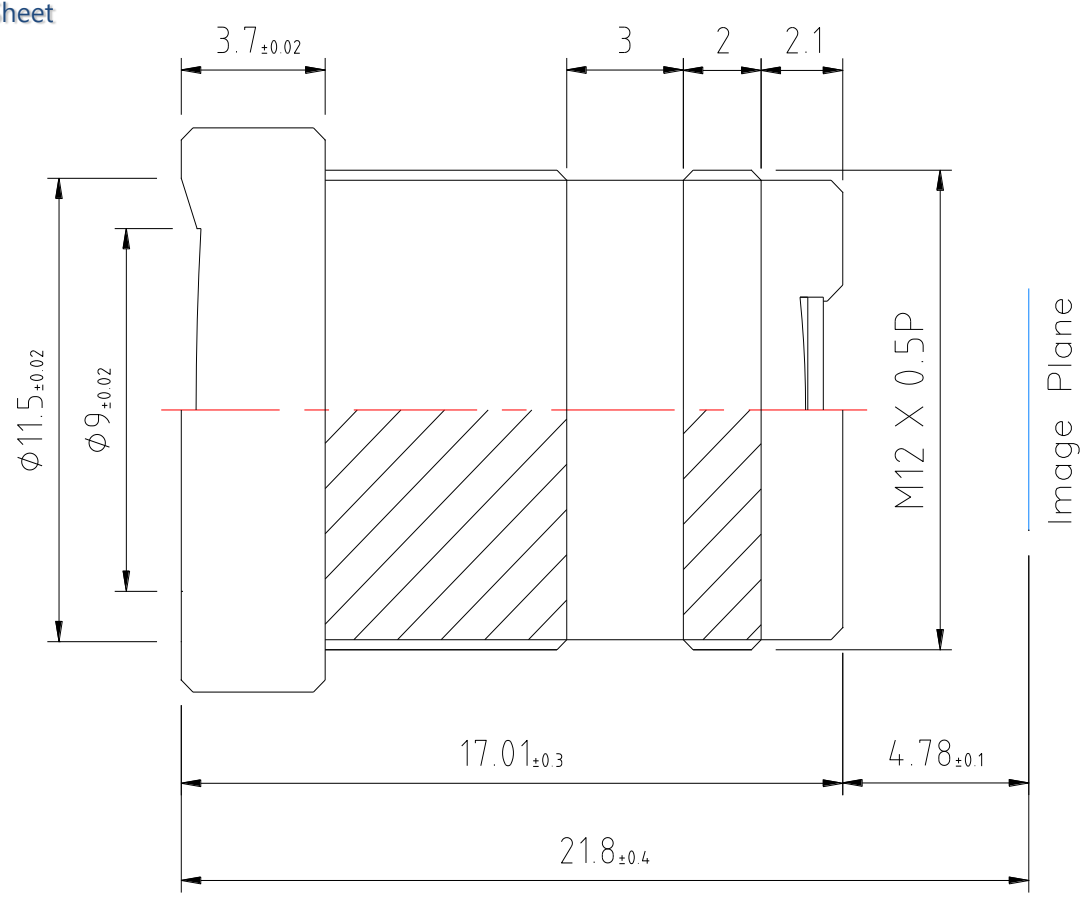

車載用 レンズ

NL304MCF

	Focal Length (mm)	Back Focal Length (mm)	F.#	Construction			Mount Dimension			Length from sensor to lens top (mm)	Sensor Size	View Angle (deg.)
				P	G	F	M	X	P			D
	3.0	5.85	2.0		4	1	12	X	0.5	20.92	1/3″	126.1°

◎ Spec Sheet

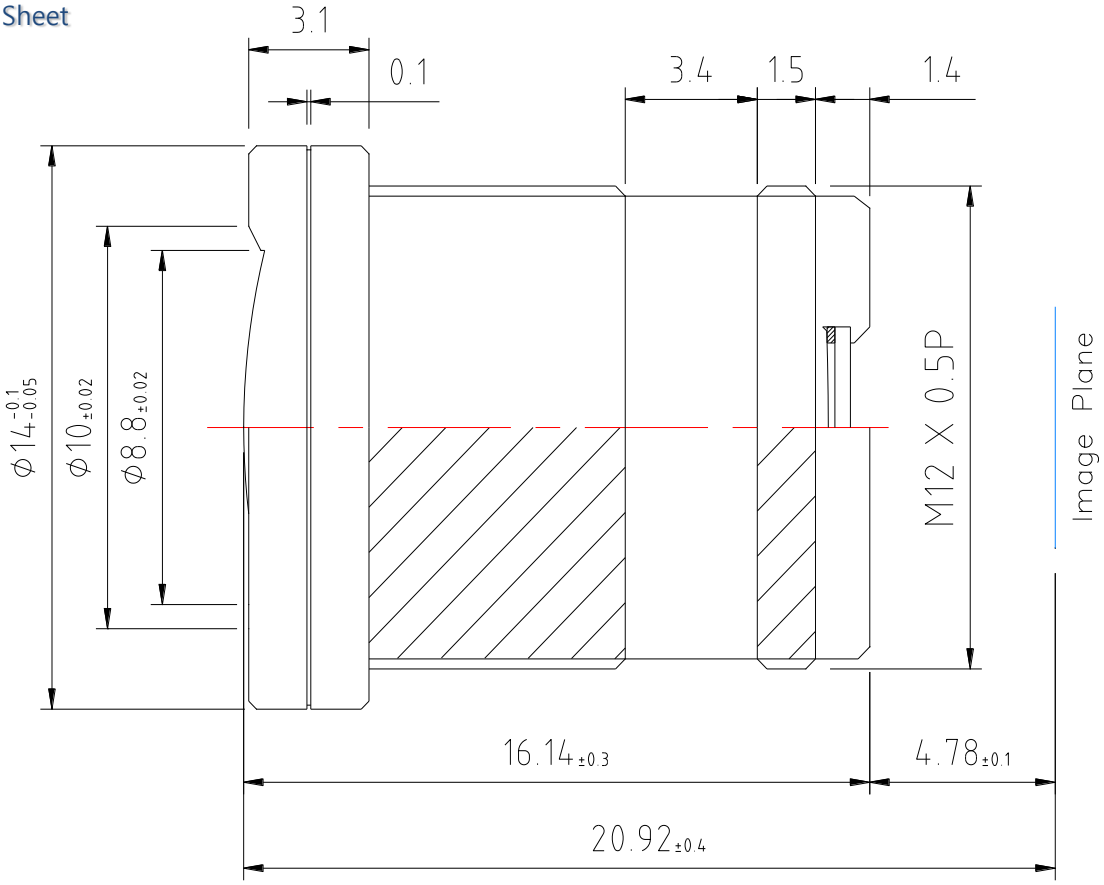

防犯カメラ用 レンズ

NL36415NF

	Focal Length (mm)	Back Focal Length (mm)	F.#	Construction			Mount Dimension			Length from sensor to lens top (mm)	Sensor Size	View Angle (deg.)
				P	G	F	M	X	P			D
	3.6	6.16	1.5		4	1	12	X	0.5	20.34	1/3″	108.5°

◎ Spec Sheet

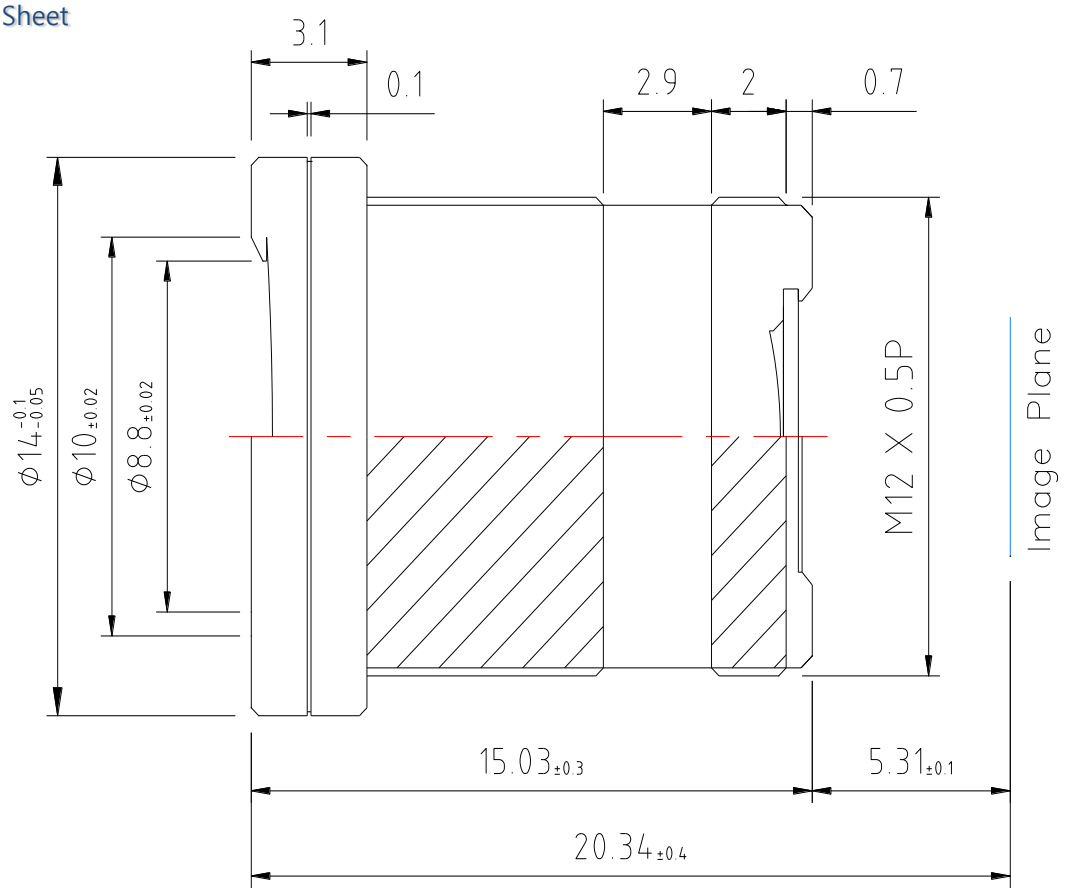

防犯カメラ用 レンズ

(TV distortion : -2%) NL274LDF

	Focal Length (mm)	Back Focal Length (mm)	F.#	Construction			Mount Dimension			Length from sensor to lens top (mm)	Sensor Size	View Angle (deg.)
				P	G	F	M	X	P			D
	2.7	3.2	2.8	1	3	1	12	X	0.5	17.08	1/4″	85°

◎ Spec Sheet

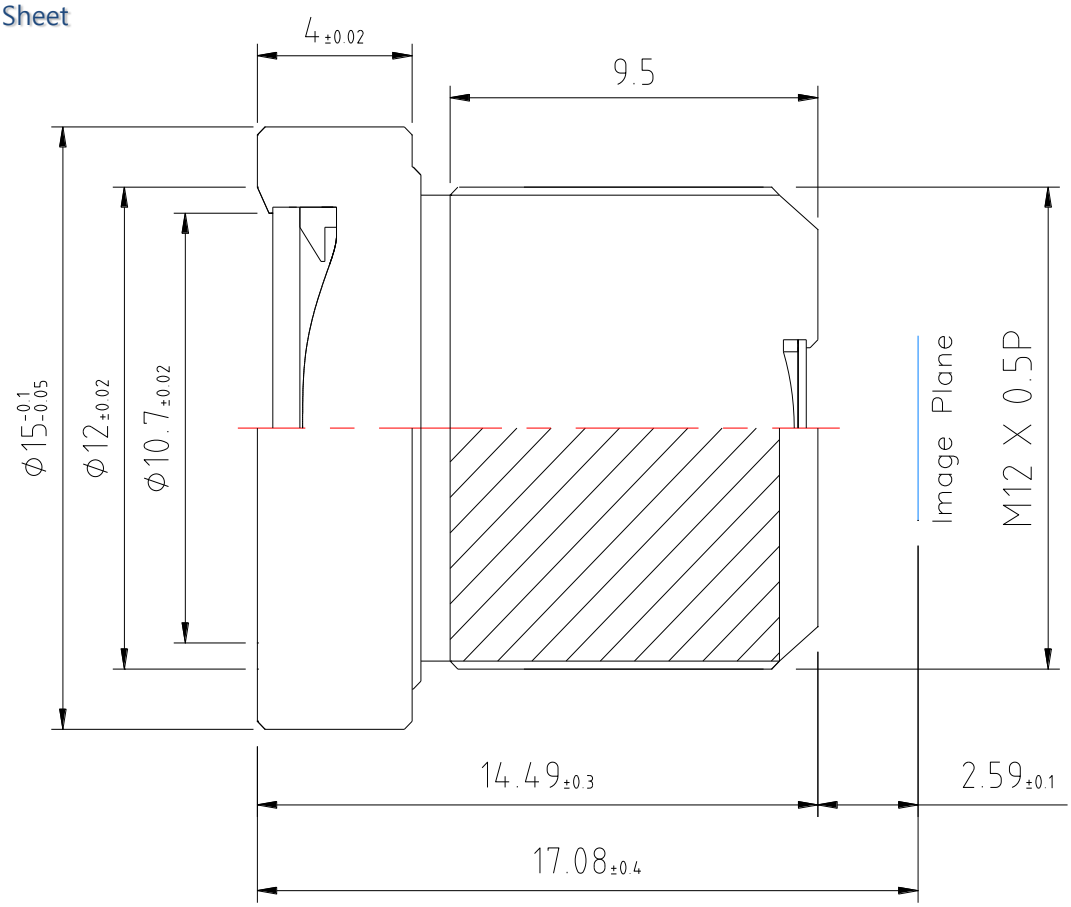

防犯カメラ用 レンズ

NL325SF

	Focal Length (mm)	Back Focal Length (mm)	F.#	Construction			Mount Dimension			Length from sensor to lens top (mm)	Sensor Size	View Angle (deg.)
				P	G	F	M	X	P			D
	3.2	4.95	2.0		5	1	12	X	0.5	17.16	1/4"	92.7°

◎ Spec Sheet

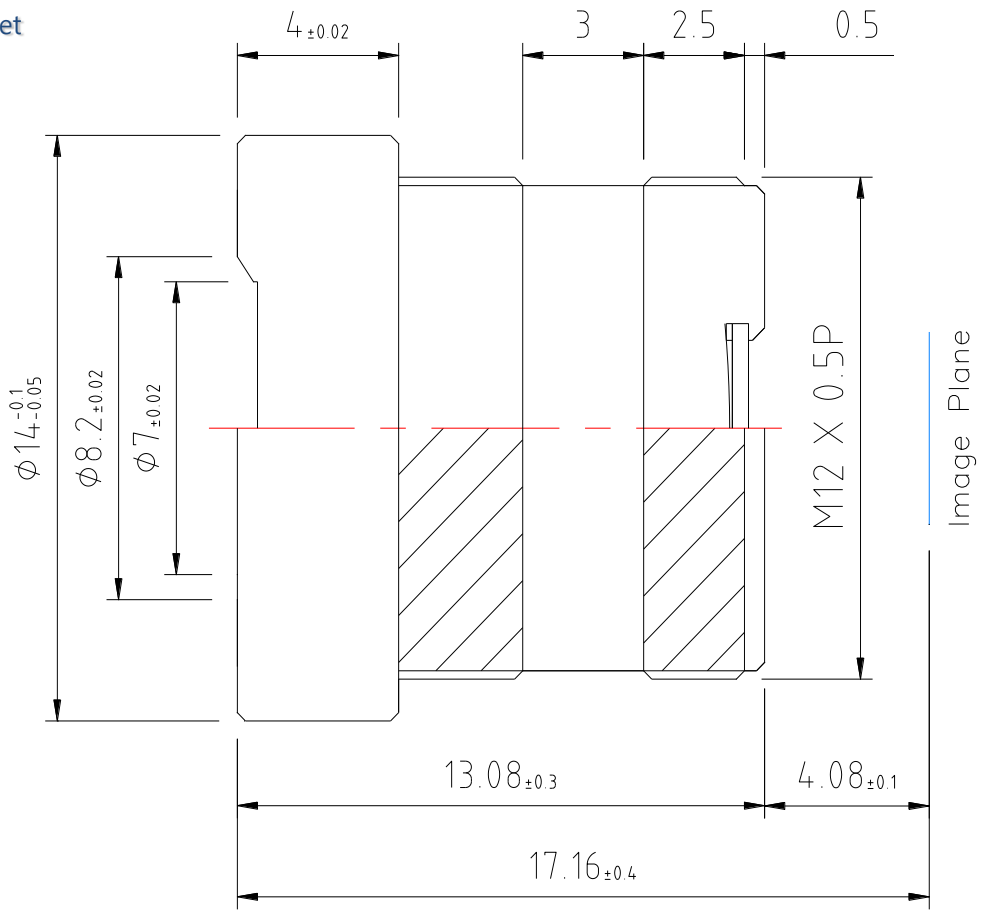

防犯カメラ用 レンズ

NL364CN

	Focal Length (mm)	Back Focal Length (mm)	F.#	Construction			Mount Dimension			Length from sensor to lens top (mm)	Sensor Size	View Angle (deg.)
				P	G	F	M	X	P			D
	3.6	5.12	1.8		4		12	X	0.5	20.89	1/3"	101.2°

◎ Spec Sheet

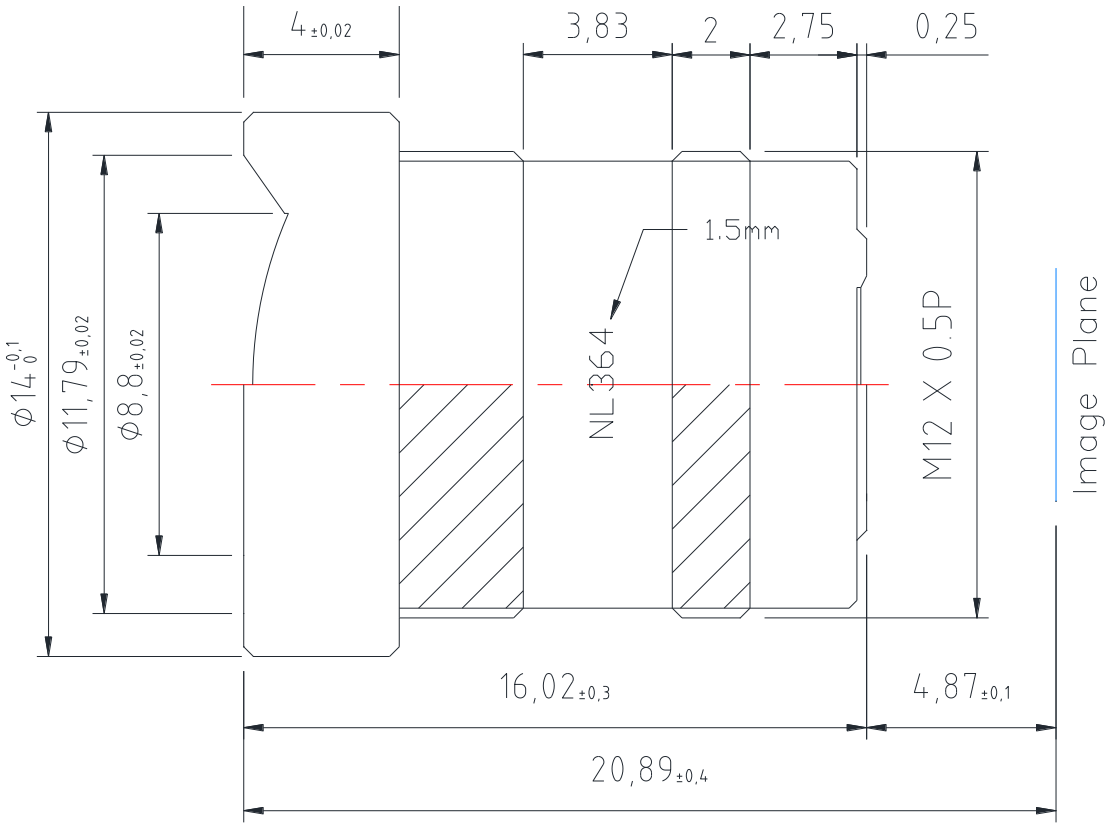

防犯カメラ用 レンズ

NL434N

	Focal Length (mm)	Back Focal Length (mm)	F.#	Construction			Mount Dimension			Length from sensor to lens top (mm)	Sensor Size	View Angle (deg.)
				P	G	F	M	X	P			D
	4.3	6.19	2.0		4		12	X	0.5	21.63	1/3"	85°

◎ Spec Sheet

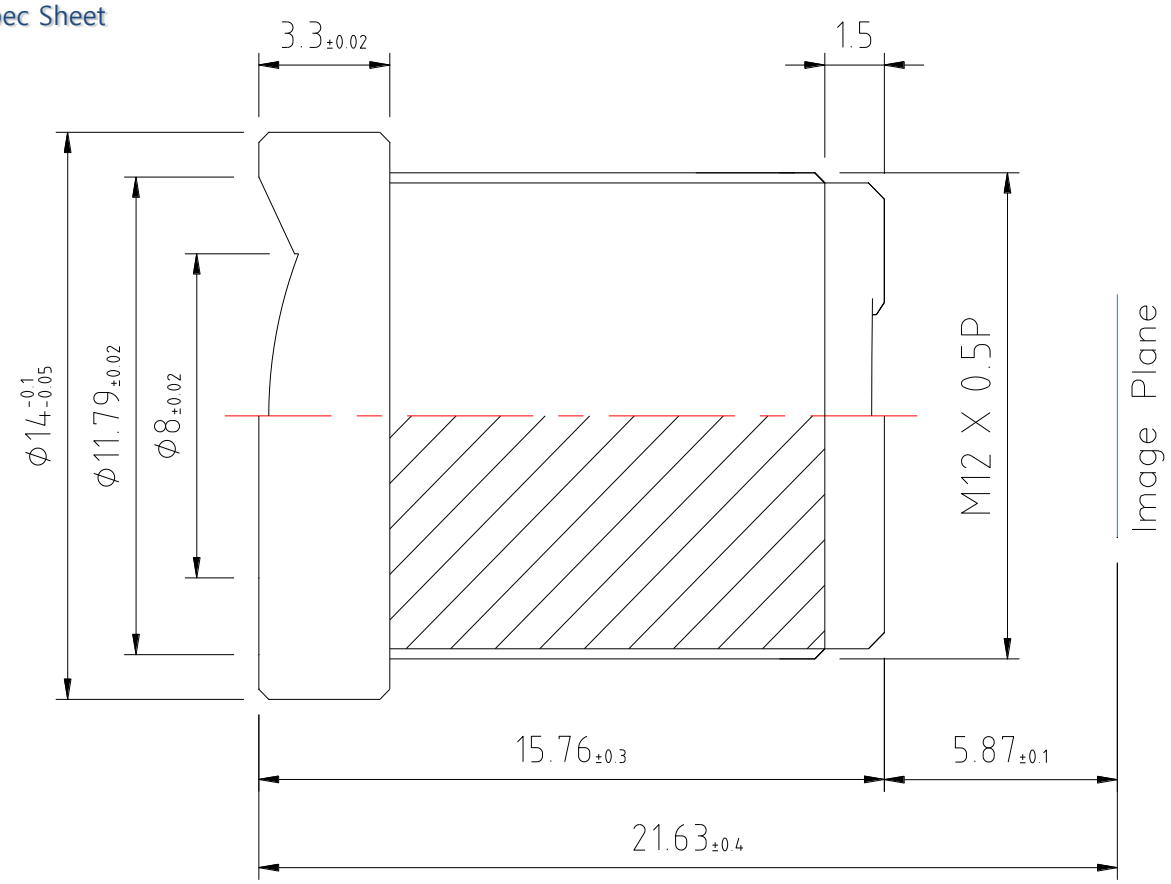

防犯カメラ用 レンズ

NL604Q

	Focal Length (mm)	Back Focal Length (mm)	F.#	Construction			Mount Dimension			Length from sensor to lens top (mm)	Sensor Size	View Angle (deg.)
				P	G	F	M	X	P			D
	6.0	8.62	2.0		4		12	X	0.5	21.98	1/3″	58.3°

◎ Spec Sheet

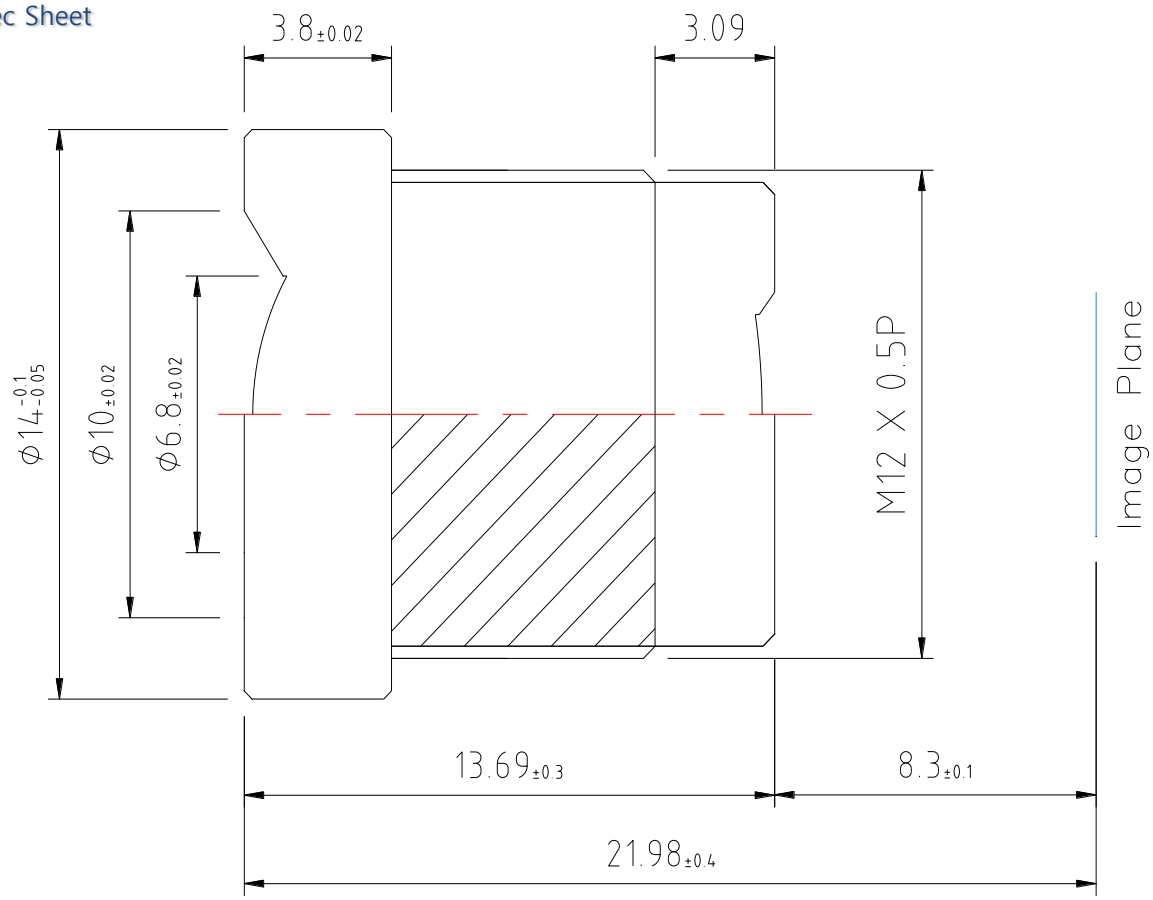

防犯カメラ用 レンズ

NL804N

	Focal Length (mm)	Back Focal Length (mm)	F.#	Construction			Mount Dimension			Length from sensor to lens top (mm)	Sensor Size	View Angle (deg.)
				P	G	F	M	X	P			D
	8.0	5.1	2.0		4		12	X	0.5	12.61	1/3″	41.8°

◎ Spec Sheet

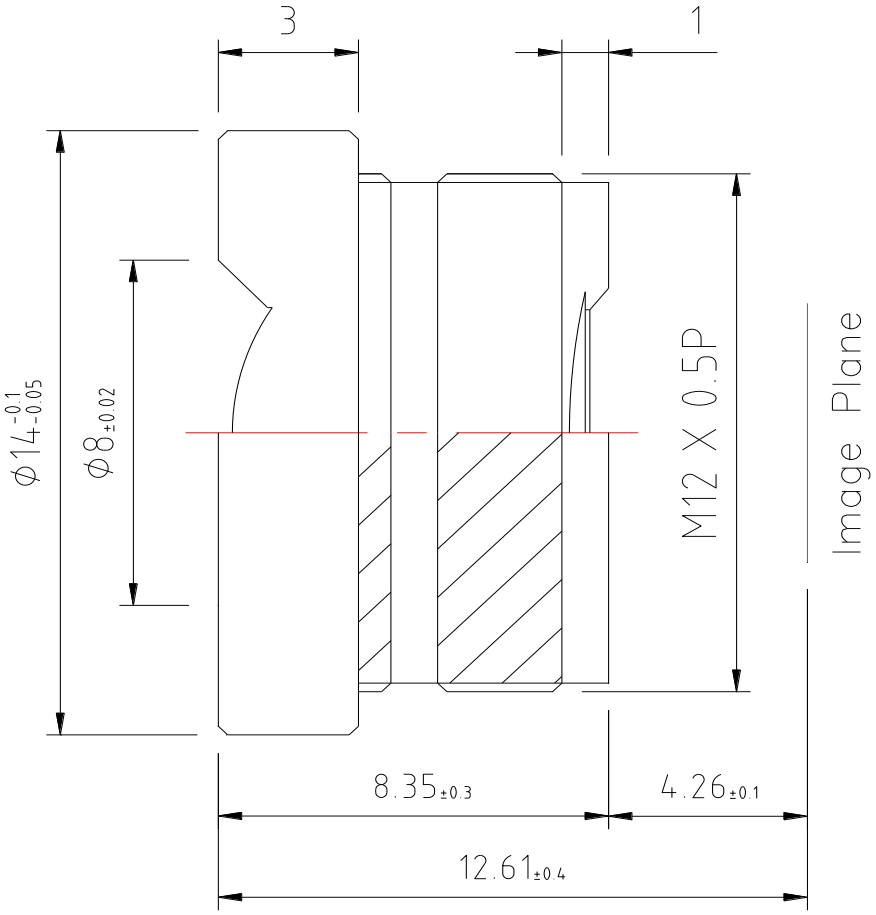

防犯カメラ用 レンズ

NL1203N

	Focal Length (mm)	Back Focal Length (mm)	F.#	Construction			Mount Dimension			Length from sensor to lens top (mm)	Sensor Size	View Angle (deg.)
				P	G	F	M	X	P			D
	12.0	8.73	2.0		3		12	X	0.5	18.71	1/3″	28°

◎ Spec Sheet

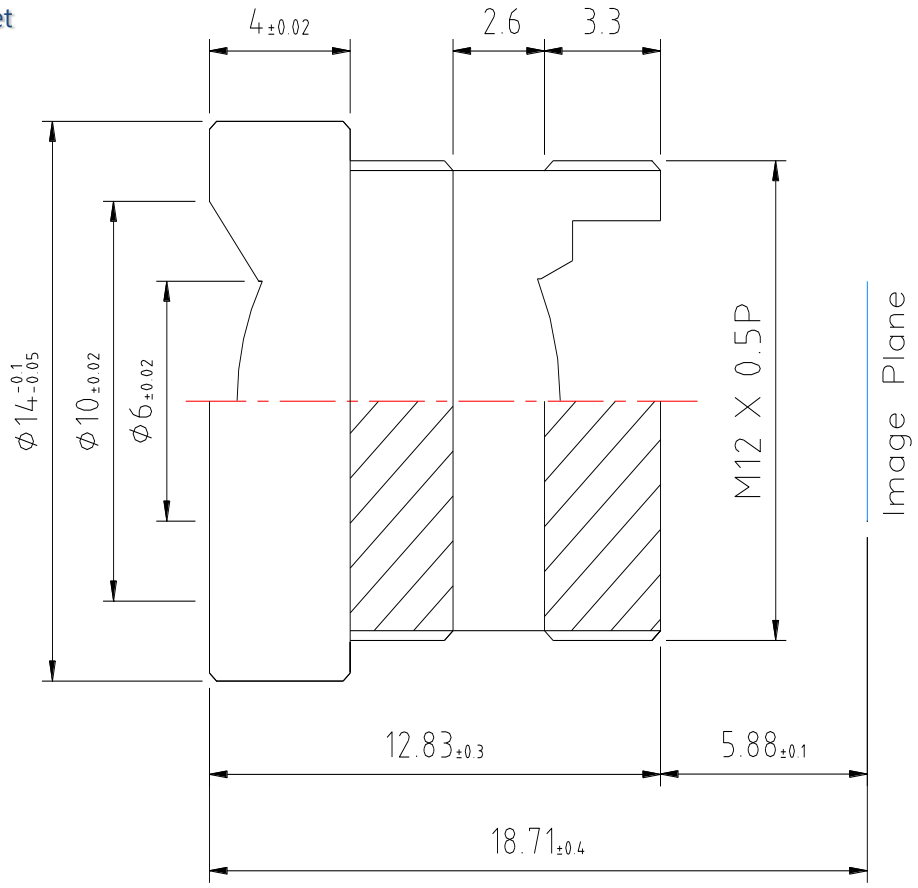

NAOTECH

A Professional
Optical Solution
Provider for Cameras

- お問い合わせ -

Tel. 82-70-8656-4059 |

Fax. 82-31-469-6953 |

Email. jhkim@naotech.co.kr |

Web Site. www.naotech.co.kr |

– 日本語でのお問合せは下記まで –

TechnoLink

株式会社エム・ティー・エム

〒102-0072 東京都千代田区飯田橋 1-12-14
Tel. 03-3262-5269 Fax. 03-3262-5880
Email. honda@technolink.co.jp (担当: 本多)
Web Site. www.technolink.co.jp